TOOLING

· Standard Sets

Top Blade

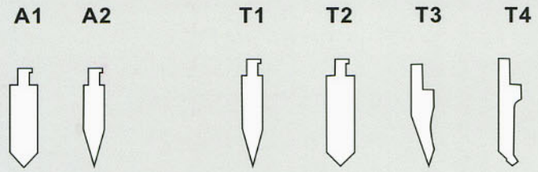

Bottom Die

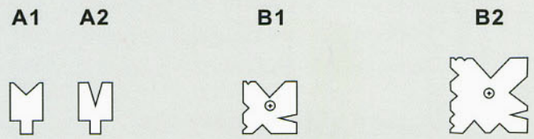

* Optional Sets

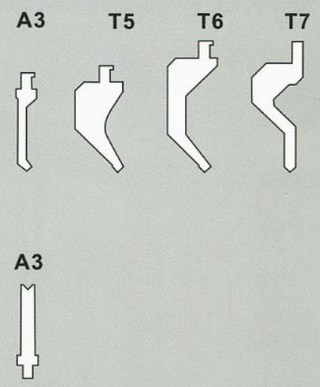

For 30-45 ton models:
- A1 or A2 Sets.

*A3 set is upon request.
*B1 bottom die is optional.

For 60-80 ton models:
- T1, T2, T3 or T4 top blades.
- B1 bottom die.

*T5, T6 and T7 top blades are optional.

For 110-220 ton models:
- T1, T2, T3 or T4 top blades.
- B2 bottom die.

*T5, T6 and T7 top blades are optional.

TECHNICAL DIMENSIONS

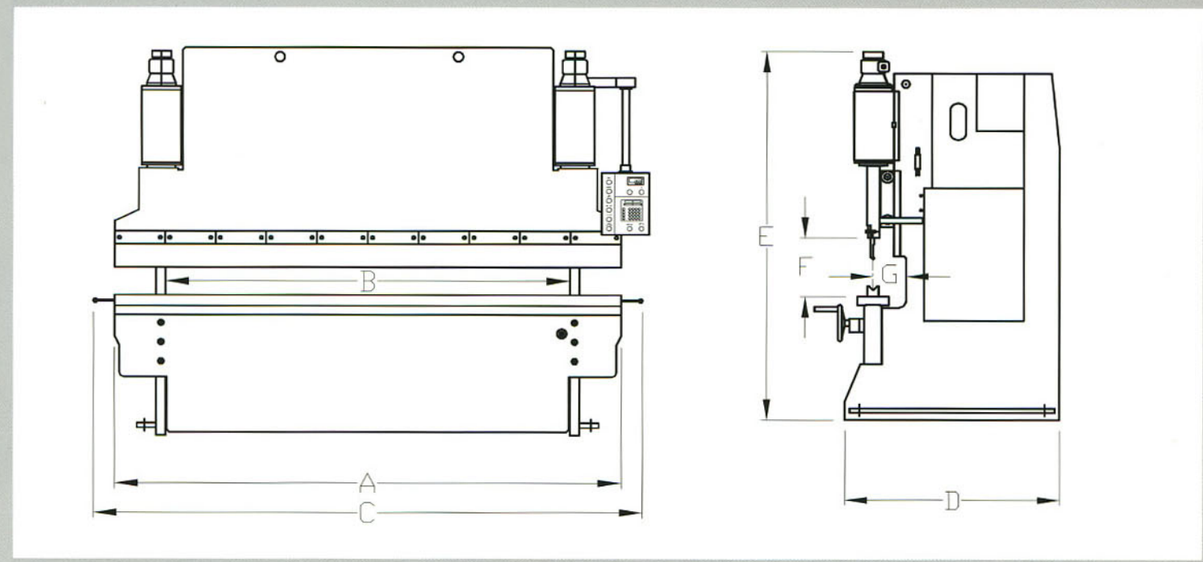

PRESSING PRESSURE CHART

V die width	Curvature pressing radius	Minimum pressing length L	Steel plate (45g/mm) Length 1000mm Curvature pressing pressure(ton) 0.5	1.0	1.2	1.6	2.0	2.3	2.6	3.2	3.6	4.5	6	9	12	16	19	22	25	30
6	1	4	3	11																
8	1.5	5.5	2	8	12															
10	1.5	7	2	7	10	17														
12	2	8.5		6	8	14	22													
16	2.5	11			6	11	17	22												
20	3	14				9	13	17	22											
25	4	18					11	14	18	27										
32	5.5	23						11	14	21	27									
40	6.5	28							11	17	21	34								
50	8	35								14	17	27	50							
63	10	45									14	21	38	85						
80	13.5	57											30	67						
100	16	71											24	54	95					
125	20	89												43	76	135				
160	26	113													60	106	149			
200	35	140														85	119	160		
250	42	175															95	128	165	238

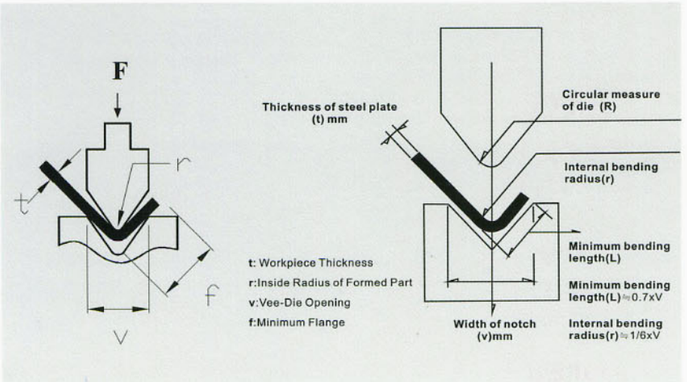

SPECIFICATION

MODEL	BENDING CAPACITY (MM)	MAX. PRESSURE (TON)	DISTANCE BETWEEN HOUSINGS (MM)	RAM STROKE (MM)	TABLE WIDTH (MM)	DISTANCE BETWEEN TABLE/RAM (MM)	OIL TANK (GALLON)	MAIN MOTOR (HP)	APPROACH SPEED (MM/SEC)	BENDING SPEED (MM/SEC)	RETURN SPEED (MM/SEC)	POWER BACK GAUGE (MM)	BACK GAUGE MOTOR (HP)	GAP (MM)	A	B	C	D	E	F	G	NW/GW (KG)	PACKING SIZE (MM)
HB-3012	2.5 x 1270	30	970	150	Bottom Die Holder	250	20	3	100	7	60	600	1/4 (OPT)	200	1270	970	1300	1100	2000	250	200	2000/2200	1800x1450x2350
HB-3015	2.0 x 1550	30	1250	150		250	24	3	100	7	60	600	1/4 (OPT)	200	1550	1250	1650	1100	2000	250	200	2400/2600	2000x1500x2350
HB-3020	1.5 x 2000	30	1550	150		250	24	3	100	7	60	600	1/4 (OPT)	200	2000	1550	2300	1100	2000	250	200	TBA	TBA
HB-4515	3.0 x 1500	45	1250	150		250	28	5	100	7	60	600	1/4 (OPT)	200	1500	1250	1650	1200	2000	250	200	2650/2850	2000x1500x2400
HB-6020	4.0 x 2000	60	1550	150	160	300	35	7.5	100	7	60	600	1/2	200	2000	1550	2300	1200	2100	300	200	3500/3800	2500x1920x2480
HB-6026	3.2 x 2600	60	2100	150	160	300	35	7.5	100	7	60	600	1/2	200	2600	2100	2800	1200	2100	300	200	4500/4800	3200x1920x2480
HB-6032	2.5 x 3200	60	2600	150	160	300	35	7.5	100	7	60	600	1/2	200	3200	2600	3400	1200	2100	300	200	5050/5350	3800x1920x2480
HB-8020	5.0 x 2000	80	1550	150	160	300	45	10	100	6	60	600	1/2	200	2000	1550	2100	1250	2100	300	200	4400/4700	2500x1920x2480
HB-8026	4.0 x 2600	80	2100	150	160	300	45	10	100	6	60	600	1/2	200	2600	2100	2800	1250	2100	300	200	5200/5500	3200x1920x2480
HB-8032	3.2 x 3200	80	2600	150	160	300	45	10	100	6	60	600	1/2	200	3200	2600	3400	1250	2100	300	200	6200/6500	3800x1920x2480
HB-11026	4.5 x 2600	110	2100	200	200	350	55	10	100	6	60	600	1/2	250	2600	2100	2800	1250	2200	350	250	6200/6400	TBA
HB-11032	3.5 x 3200	110	2600	200	200	350	55	10	100	6	60	600	1/2	250	3200	2600	3400	1250	2200	350	250	6600/7100	TBA
HB-11040	2.5 x 4000	110	3400	200	200	350	55	10	100	6	60	600	1	250	4000	3400	4300	1250	2200	350	250	9400/9700	TBA
HB-16026	6.5 x 2600	160	2100	200	200	400	80	15	100	6	60	800	1	250	2600	2100	2800	1400	2400	400	250	7800/8300	TBA
HB-16032	5.0 x 3200	160	2550	200	200	400	80	15	100	6	60	800	1	250	3200	2550	3400	1400	2400	400	250	9200/9600	TBA
HB-16040	4.3 x 4000	160	3350	200	200	400	80	15	100	6	60	800	1	250	4000	3350	4300	1400	2400	400	250	TBA	TBA
HB-22026	9.0 x 2600	220	2100	200	200	400	100	20	100	6	60	800	1	250	2600	2100	2800	1600	2550	400	250	8200/8600	TBA
HB-22032	8.0 x 3200	220	2500	200	200	400	100	20	100	6	60	800	1	250	3200	2500	3400	1600	2550	400	250	TBA	TBA
HB-22040	6.5 x 4000	220	3300	200	200	400	100	20	100	6	60	800	1	250	4000	3300	4300	1600	2550	400	250	13000/14500	TBA

*** Models Over 220 Tons Are Upon Request**

Thickness of steel plate(t) mm	0.6-4.0	4.5-8	9-25
Width of notch (v)mm	(6-8)xt	(8-10)xt	(10-12)xt

BEMATO®

STRIVING FOR SERVICE AND SATISFACTION

BENIGN ENTERPRISE CO., LTD.
SUITE 4, 5F., NO. 20, TA-LONG ROAD, TAICHUNG, TAIWAN R.O.C.
MAILING ADDRESS: P.O.BOX 747 TAICHUNG, TAIWAN R.O.C.
TEL:886-4-23233016 FAX:886-4-23232826 . 23238341
e-mail:bematoco@ms11.hinet.net
http://www.e-bemato.com . www.bemato.com.tw